UNITONE® 友利通

# C1N 200 DC Contactor Product Manual

## ● Product Appearance and Features

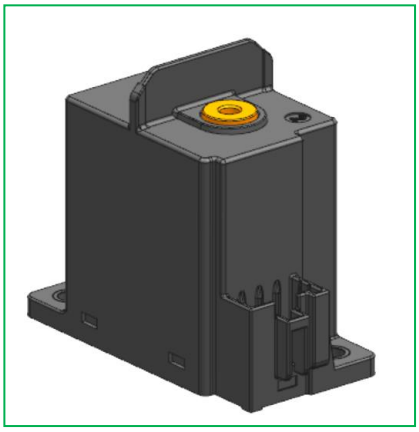

Features

- Magnetic blowout arc-extinguishing design for high-capacity interruption at 1500 V.
- Distinctive contact structure for enhanced surge and current withstand capability.
- Short-circuit-resistant structure with a withstand capability of at least 8000 A.
- Dielectric withstand voltage of at least 4000 V between high- and low-voltage circuits.
- Non-polarized load terminals.
- Energy-saving coil drive option; the energy-saving drive has polarized connections.
- Environmentally compliant product (RoHS compliant).

## ● Product Specifications

| Main Contact Specifications | |
|---|---|
| Contact construction | Bridge-type, normally open |
| Contact material | Silver-copper alloy |
| Contact resistance | ≤ 0.3 mΩ (@ 200 A) |
| Contact voltage drop | / |
| Max. switching voltage | 1500 Vdc |
| Switching endurance | / |
| Inrush endurance | 200 A, C=1500μF, 20 V, 100,000 operations |
| Breaking endurance | 20 A/1500 Vdc, 15,000 operations |
| | 80 A/1500 Vdc, 500 operations |
| | 200 A/1000 Vdc, 1,000 operations |
| | 200 A/1500 Vdc, 100 operations |
| | 1000 A/1500 Vdc, 1 operation |
| Short-circuit current | 8000 A * (5 ms), 1 operation |
| Rated current | 200 A |
| Minimum load current | 6 V/1 A |
| Mechanical endurance | 200,000 cycles (0.5 s ON / 0.5 s OFF) |

Note: * 6000 A for the PWM energy-saving type.

| Auxiliary Contact Specifications | |
|---|---|
| Contact construction | SPST, normally open |
| Contact resistance | ≤ 100 mΩ (@0.1 A) |
| Rated load | DC12 V 0.1 A |
| Switching endurance | DC12 V 0.1 A 10,000 operations |

| Coil Specifications | | | |
|---|---|---|---|
| Rated voltage (Vdc) | 12 | 24 | 12/24 PWM energy-saving drive |
| Operating voltage range (Vdc) | 9-16 | 18-32 | 9-36 |
| Operate voltage (Vdc) | ≤ 9 | ≤ 18 | ≤ 9 |

| | | | |
|---|---|---|---|
| Release voltage (Vdc) | ≥ 1 | ≥ 2 | ≥ 5 |
| Coil resistance (Ω) | 24 | 96 | 3.1 |
| Pick-up current (A) | 0.5 | 0.25 | 3.8 * |
| Start-up time (ms) | / | / | ≤ 150* |
| Rated current (A) | 0.5 | 0.25 | 0.2 * |
| Pick-up power (W) | 6 | 6 | 46 * |
| Steady-state power (W) | 6 | 6 | 2.5 * |

Note: * At 12 V.

| Performance Specifications | | |
|---|---|---|
| Insulation resistance | Coil to contacts | ≥ 1000 MΩ |
| | Same-pole contacts | ≥ 1000 MΩ |
| | Main to aux. contacts | ≥ 1000 MΩ |
| Dielectric withstand voltage | Coil to contacts | 4000 Vac, 1 minute |
| | Same-pole contacts | 4000 Vac, 1 minute. Note: Across auxiliary contacts: 500 Vac |
| | Main to aux. contacts | 4000 Vac, 1 minute |
| Impulse withstand voltage | | Coil to contacts: 10 kV (1.2 × 50 μs) |
| Operate time | | ≤ 40 ms |
| Release time | | ≤ 10 ms |
| Contact bounce time at operation | | ≤ 5 ms |
| Vibration resistance | Endurance | 10–55–10 Hz; single amplitude 0.75 mm (double amplitude 1.5 mm) |
| | Functional | Energized: 10–55–10 Hz; single amplitude 0.75 mm (double amplitude 1.5 mm)<br>De-energized: 10–55–10 Hz; single amplitude 0.15 mm (double amplitude 0.3 mm) |
| Shock resistance | Endurance | 1000m/s² |
| | Functional | Energized: 100 m/s²; de-energized: 50 m/s² |
| Operating ambient temperature | | -40 to +85 °C (no icing or condensation) |
| Operating ambient humidity | | 5-85% RH |
| Weight | 12 V | Approx. 370 g |
| | 24 V | Approx. 365 g |
| | PWM energy-saving type | Approx. 315 g |

Note: The above data are initial values at room temperature. Special orders are available for other requirements.

## ● Product Certifications

| Product Certifications | |
|---|---|
| UL | E543909 |
| TUV | R 50639203 0001 |
| CCC | 2024010304702839 |

## ● Ordering Code

| UNE | - C1N | 200 | 1500 | -BD | -D S1 | C W | -A 1W | - 5 | - XXX |
|---|---|---|---|---|---|---|---|---|---|
| [1] | [2] | [3] | [4] | [5] | [6] | [7] | [8] | [9] | [10] |

| No. | Code element | Description and examples |
|---|---|---|
| 1 | Manufacturer code | UNE: UNITONE contactors |
| 2 | Product series code | C1N: Product series code (C = ceramic type) |
| 3 | Load current | 300: Contact load current 300 A dc<br>250: Contact load current 250 A dc<br>200: Contact load current 200 A dc<br>150: Contact load current 150 A dc |
| 4 | Load voltage | 1500: 1,500 Vdc |
| 5 | Main contact arrangement | -B<br>D: Non-polarized, one normally open circuit |
| 6 | Coil drive type and voltage | -D<br>12: Direct drive, 12 Vdc<br>24: Direct drive, 24 Vdc<br>S1: PWM energy-saving drive, wide drive voltage range 12–24 Vdc |
| 7 | Coil drive connection | C<br>W: Wire leads with tinned ends |
| 8 | Auxiliary contact arrangement and connection | -A<br>00: No auxiliary contacts<br>1W: One normally open auxiliary contact set, wire leads |
| 9 | Main contact termination | -5: Internally threaded terminals |
| 10 | Customer-specific feature code | -XXX: Customer-specific feature code |

## ● Outline Dimensions, Mounting and Wiring Diagrams

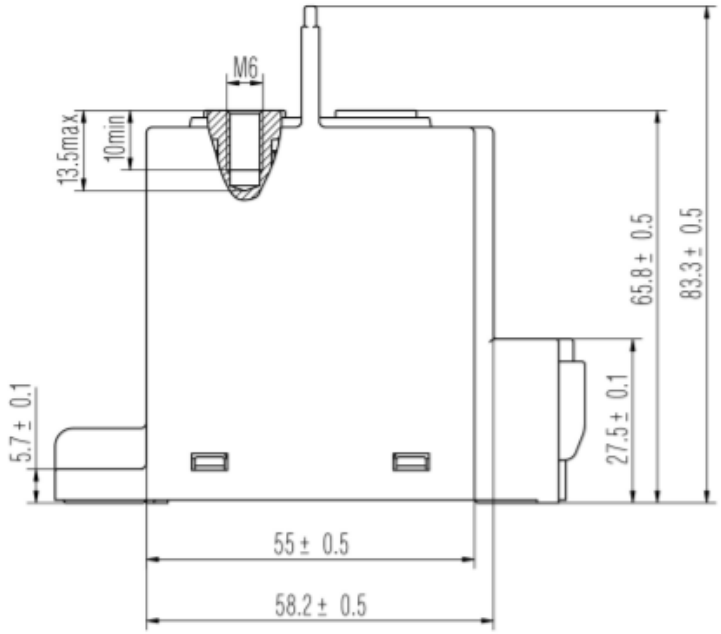


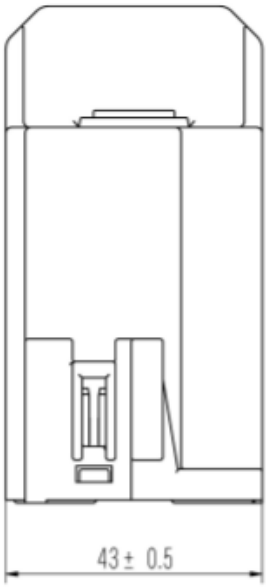


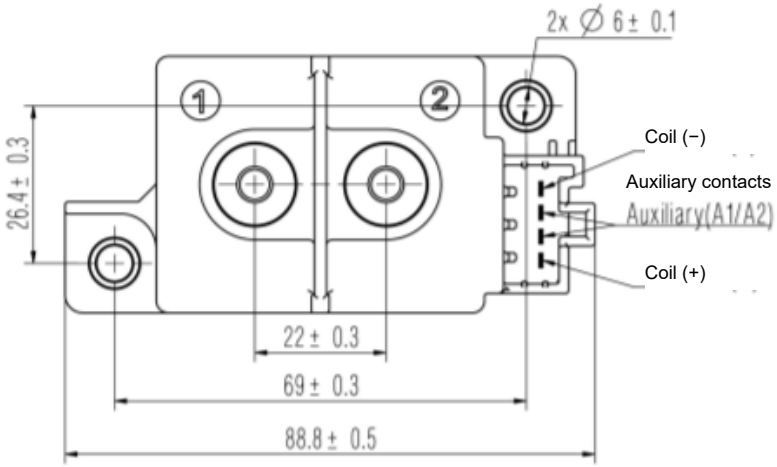


Note: Unspecified outline dimension tolerances are as follows.

| Unspecified Outline Dimension Tolerances | |
|---|---|
| Outline dimension (mm) | Tolerance (mm) |
| ≤10 | ±0.3 |
| >10–50 | ±0.5 |

Recommended connectors:

1. THB (Tianhai) connector: 0488701
2. Yazaki connector: 7283-1044

| Supplier | Signal wire | Four-way receptacle housing | Spacer | Crimp terminal |
|---|---|---|---|---|
| THB (Tianhai) 0488701 | UL 3266 20AWG | 0488702 | 0488703 | 0117505 |
| Yazaki 7283-1044 | UL 3266 20AWG | 7283-1044 | 7157-4012 | 7116-4020 |

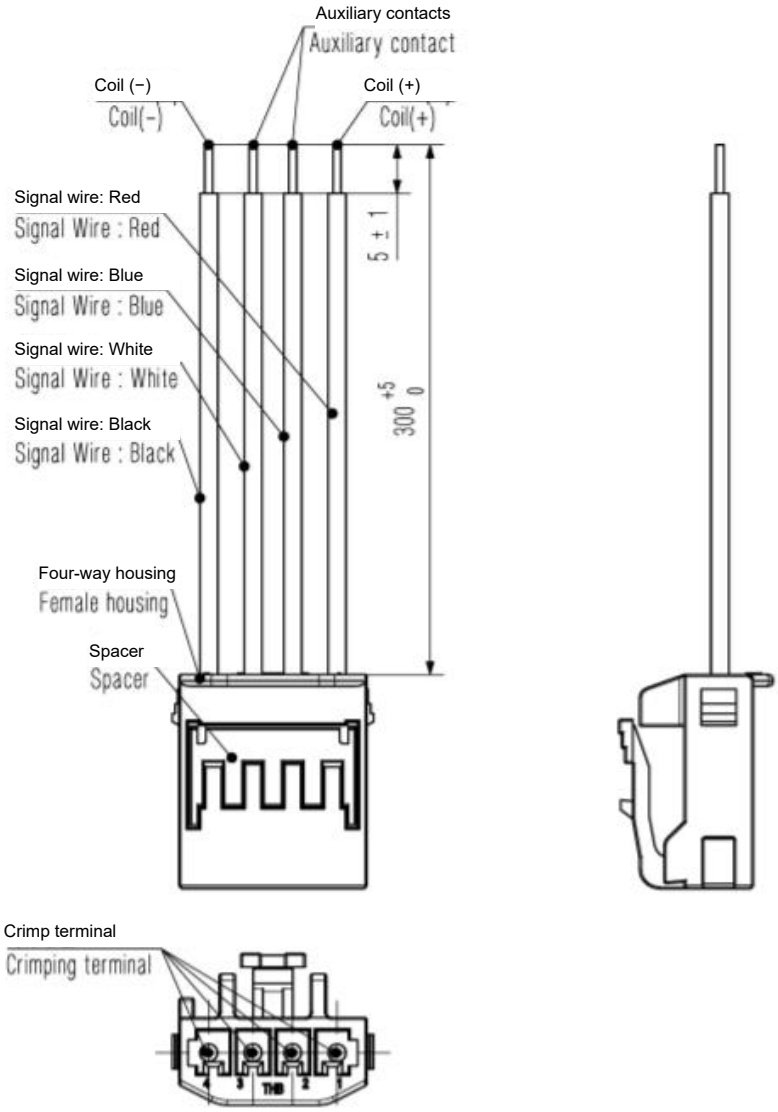


Note: Connectors are optional parts.

Note: connector are optional parts.

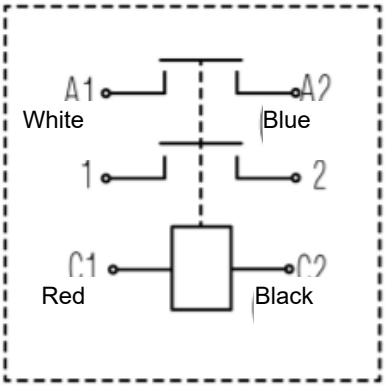


Notes:

1. Terminals 1 and 2: Non-polarized load terminals.

2. C1 and C2: Polarized coil terminals, red “+”, black “−”. Wire: 20 AWG; length: 300 ± 10 mm.

3. A1 and A2: Non-polarized auxiliary contacts. Wire: 20 AWG; length: 300 ± 10 mm.

## ● Precautions for Use

1. Select a suitable product according to the application, performance requirements and actual operating conditions of the end product. For conditions not expressly specified, please contact us for the necessary technical support.

2. The contactor manufacturer cannot evaluate all performance requirements for every application or all specific design details of the end product. The customer therefore bears sole responsibility for final product selection.

3. Every effort has been made to ensure the accuracy of this information; however, errors may occur. Products, specifications and parameters may change due to product improvements. For the parameters and performance of a specific product, refer to the product specifications and samples provided by UNITONE. This information is for product selection reference only.

4. Operate the contactor within the rated operating range stated in the product specifications. Operation outside this range may cause degraded performance, abnormal operation or failure. The company accepts no liability for degraded performance, abnormal operation or failure resulting from use outside the rated operating range.

5. All contact ratings are specified for resistive loads. For inductive loads (L loads) with L/R ≥ 1 ms, provide surge suppression in parallel with the load. Otherwise, electrical endurance may be reduced or interruption failure may occur.

6. To suppress coil back EMF, a nonlinear resistor (varistor) is recommended. Energy handling capability: at least 1 J; voltage parameter: 1.5–2 times the rated voltage. A diode will substantially increase the contactor release time and consequently reduce breaking performance. Pay particular attention to this effect.

7. For contactors with a PWM energy-saving drive, the built-in energy-saving drive circuit includes coil back-EMF suppression and fast-breaking functions.

8. The internal contacts are gas-protected. Internal gas permeation occurs as contact temperature changes (ambient temperature plus the temperature rise due to current flow). Do not expose the contactor for extended periods to temperatures outside its operating range (-40 to 85 °C).

9. This contactor contains magnetic components for magnetic blowout arc extinction. Avoid installation in strong magnetic fields (near transformers or magnets) or close to heat-generating objects.

10. Use washers when mounting the contactor to prevent loosening. Use M5 mounting screws tightened to 3-4 N·m. The permissible insertion and withdrawal forces are: (1) load terminals: 49 N; (2) coil terminals: 49 N. Exceeding these limits may cause damage.

11. When using M5 screws, ensure sufficient washer thickness and strength; otherwise, the washers may deform and crack the housing.

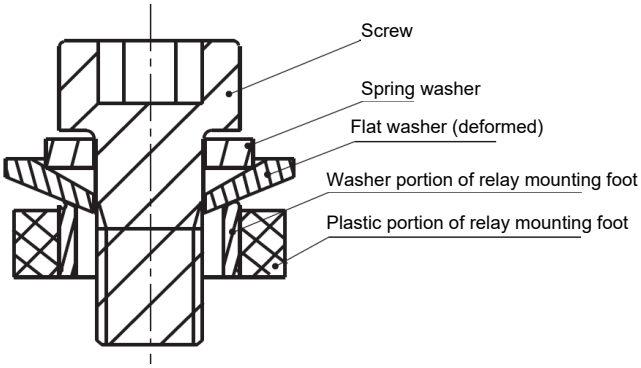


**12.** Keep grease and other foreign matter off the terminal tabs. Use connecting conductors with a cross-sectional area of at least 70 mm²; otherwise, abnormal heating may occur at the terminals.

**13.** Observe the recommended copper busbar thickness and bolt tightening torque in the table below. Values outside these recommendations may cause stripped threads or insecure mounting. Insufficient torque results in inadequate contact pressure between the busbar and terminal, increasing interface resistance and causing severe localized heating, abnormally high temperatures or even contactor burnout. At rated current, the busbar cross-sectional area shall be at least the recommended value below. Installing both busbars on the same side is not recommended, to avoid high-voltage short circuits or arcing.

| Load terminal type | Recommended busbar thickness | Recommended busbar cross-section | Recommended busbar hole diameter | Tightening torque |
|---|---|---|---|---|
| Internal thread M6 | 3 mm | ≥ 70 mm² | Ø6.1 mm-Ø6.5 mm | 6 N·m-8 N·m |

**14.** Dropping the contactor may cause structural failure or deterioration of its internal magnetic components, affecting product function and performance. As a general rule, a contactor that has been dropped shall not be used again.

**15.** Keep silicone-containing substances (such as silicone rubber, silicone oil, silicone-based coatings and silicone fillers) away from the contactor. They may release silicon-containing volatile gases that deposit on the contacts and cause poor electrical contact.

Note: Products, specifications and parameters may change as a result of product improvements. UNITONE reserves the right to revise this product manual. Customers should confirm its contents before placing their first order and request updated product information where necessary.

© UNITONE