C2N 600 DC Contactor Product Manual

● Product Appearance and Features

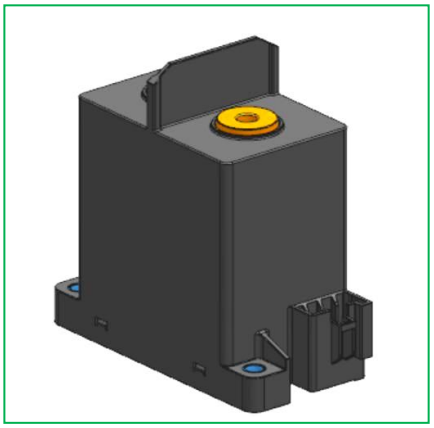

Features

- Magnetic blowout arc-extinguishing design for high-capacity interruption at 1500 V, suitable for energy storage applications.
- Distinctive contact structure for enhanced surge and current withstand capability.
- Short-circuit-resistant structure with a withstand capability of at least 8000 A.
- Dielectric withstand voltage of at least 4000 V between high- and low-voltage circuits.
- Non-polarized load terminals.
- Environmentally compliant product (RoHS compliant).

● Product Specifications

Main Contact Specifications	
Contact construction	Bridge-type, normally open
Contact material	Silver-copper alloy
Contact resistance	≤ 0.2 mΩ (@ 600 A)
Contact voltage drop	/
Max. switching voltage	1500 Vdc
Switching endurance	/
Making endurance	Steady-state 600 A, C = 1100 μF, 37.5 V, 20,000 operations
Breaking endurance	600 A/1500 Vdc, 50 operations
	600 A/1000 Vdc, 100 operations
	600 A/750 Vdc, 200 operations
	2000 A/1000 Vdc, 1 operation
	1000 A/1500 Vdc, 1 operation
Short-circuit current	8000 A (5 ms), 1 operation
Rated current	600 A
Minimum load current	6 V/1 A
Mechanical endurance	200,000 cycles (0.5 s ON / 0.5 s OFF)

Auxiliary Contact Specifications	
Contact construction	SPST, normally open
Contact resistance	≤ 100 mΩ (@0.1 A)
Rated load	DC12 V 0.1 A
Switching endurance	DC12 V 0.1 A 10,000 operations

Coil Specifications	
Rated voltage (Vdc)	12/24 (PWM energy-saving drive)
Operating voltage (Vdc)	9-36
Operate voltage (Vdc)	≤ 9
Release voltage (Vdc)	≥ 5

Coil resistance (Ω)	3.1
Pick-up current (A)	3.8 *
Start-up time (ms)	≤ 150 *
Rated current (A)	0.33 *
Pick-up power (W)	48 *
Steady-state power (W)	4 *

Note: * At rated voltage.

Performance Specifications		
Insulation resistance	Coil to contacts	≥ 1000 MΩ
	Same-pole contacts	≥ 1000 MΩ
	Main to aux. contacts	≥ 1000 MΩ
Dielectric withstand voltage	Coil to contacts	4000 Vac, 1 minute
	Same-pole contacts	4000 Vac, 1 minute. Note: Across auxiliary contacts: 500 Vac
	Main to aux. contacts	4000 Vac, 1 minute
Impulse withstand voltage		Coil to contacts: 10 kV (1.2 × 50 μs)
Operate time		≤ 50 ms
Release time		≤ 20 ms
Contact bounce time at operation		≤ 5 ms
Vibration resistance	Sinusoidal vibration	10-500 Hz; double amplitude 1.5 mm; acceleration 49 m/s²
Shock resistance	Functional	Closed: 588 m/s²; open: 196 m/s²
	Endurance	588 m/s²
Operating ambient temperature		-40 to +85 °C (no icing or condensation)
Operating ambient humidity		5-85% RH
Weight		Approx. 780 g

Note: The above data are initial values at room temperature. Special orders are available for other requirements.

● Product Certifications

Product Certifications	
UL	E543909
TUV	R 50639838 0001
CCC	2024010304659215

● Ordering Code

UNE - C2N 600 1500 -BD -D S1 - C 2 -A 4C - 5 - XXX

[1] [2] [3] [4] [5] [6] [7] [8] [9] [10]

No.	Code element	Description and examples
1	Manufacturer code	UNE: UNITONE contactors
2	Product series code	C2N: Product series code (C = ceramic type)
3	Load current	600: Contact load current 600 A dc 500: Contact load current 500 A dc 400: Contact load current 400 A dc
4	Load voltage	1500: 1,500 Vdc
5	Main contact arrangement	-B D: Non-polarized, one normally open circuit
6	Coil drive type and voltage	-D S1: PWM energy-saving drive, wide drive voltage range 12-24 Vdc
7	Coil drive connection	C 2: Connector built into the contactor body
8	Auxiliary contact arrangement and connection	-A 00: No auxiliary contacts 4C: One normally open auxiliary contact set; built-in connector, type C
9	Main contact termination	-5: Internally threaded terminals
10	Customer-specific feature code	-XXX: Customer-specific feature code

● Outline Dimensions, Mounting and Wiring Diagrams

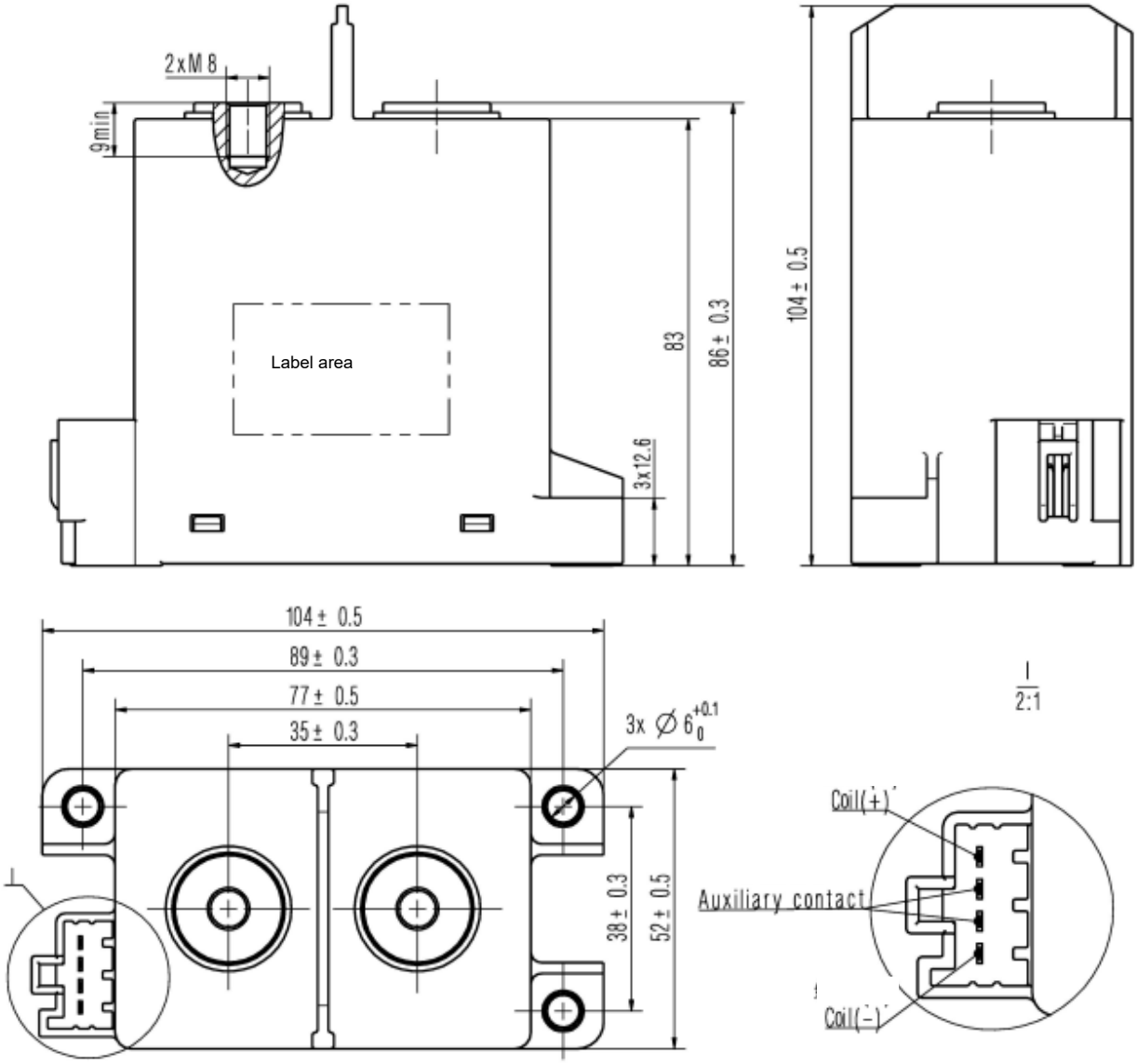

Note: Unspecified outline dimension tolerances are as follows.

Unspecified Outline Dimension Tolerances	
Outline dimension (mm)	Tolerance (mm)
≤ 10	± 0.3
>10-50	± 0.5

Recommended connectors:

1. THB (Tianhai) connector: 0488701
2. Yazaki connector: 7283-1044

Supplier	Signal wire	4-way receptacle housing	Spacer	Crimp terminal
THB (Tianhai) 0488701	UL 3266 20AWG	0488702	0488703	0117505
Yazaki 7283-1044	UL 3266 20AWG	7283-1044	7157-4012	7116-4020

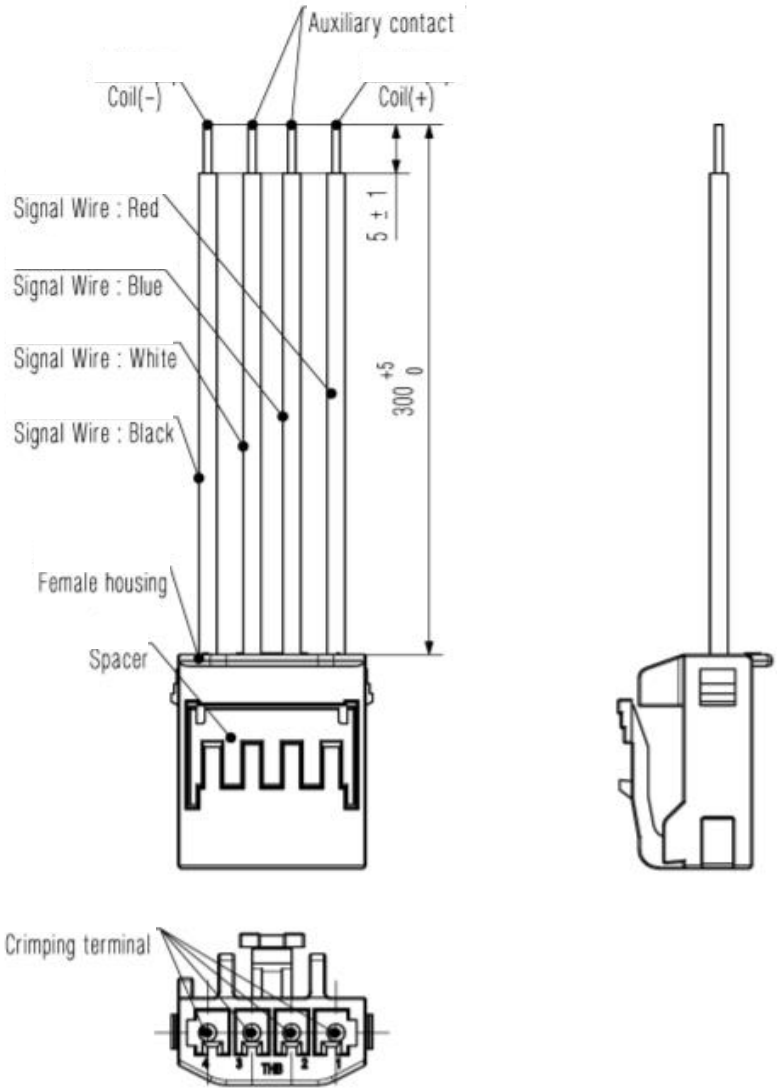

Note: Connectors are optional parts.

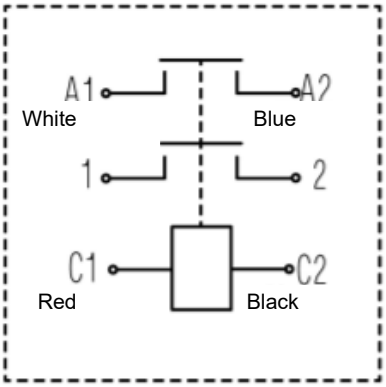

Notes:

1. Terminals 1 and 2: Non-polarized load terminals.

2. C1 and C2: Polarized coil terminals, red “+”, black “-”. Wire: 20 AWG; length: 300 ± 10 mm.

3. A1 and A2: Non-polarized auxiliary contacts. Wire: 20 AWG; length: 300 ± 10 mm.

● Precautions for Use

1. Select a suitable product according to the application, performance requirements and actual operating conditions of the end product. For conditions not expressly specified, please contact us for the necessary technical support.

2. The contactor manufacturer cannot evaluate all performance requirements for every application or all specific design details of the end product. The customer therefore bears sole responsibility for final product selection.

3. Every effort has been made to ensure the accuracy of this information; however, errors may occur. Products, specifications and parameters may change due to product improvements. For the parameters and performance of a specific product, refer to the product specifications and samples provided by UNITONE. This information is for product selection reference only.

4. Operate the contactor within the rated operating range stated in the product specifications. Operation outside this range may cause degraded performance, abnormal operation or failure. The company accepts no liability for degraded performance, abnormal operation or failure resulting from use outside the rated operating range.

5. All contact ratings are specified for resistive loads. For inductive loads (L loads) with L/R ≥ 1 ms, provide surge suppression in parallel with the load. Otherwise, electrical endurance may be reduced or interruption failure may occur.

6. To suppress coil back EMF, a nonlinear resistor (varistor) is recommended. Energy handling capability: at least 1 J; voltage parameter: 1.5-2 times the rated voltage. A diode will substantially increase the contactor release time and consequently reduce breaking performance. Pay particular attention to this effect.

7. For contactors with a PWM energy-saving drive, the built-in energy-saving drive circuit includes coil back-EMF suppression and fast-breaking functions.

8. The internal contacts are gas-protected. Internal gas permeation occurs as contact temperature changes (ambient temperature plus the temperature rise due to current flow). Do not expose the contactor for extended periods to temperatures outside its operating range (-40 to 85 °C).

9. This contactor contains magnetic components for magnetic blowout arc extinction. Avoid installation in strong magnetic fields (near transformers or magnets) or close to heat-generating objects.

10. Use washers when mounting the contactor to prevent loosening. Use M5 mounting screws tightened to 3-4 N·m. The permissible insertion and withdrawal forces are: (1) load terminals: 49 N; (2) coil terminals: 49 N. Exceeding these limits may cause damage.

11. When using M5 screws, ensure sufficient washer thickness and strength; otherwise, the washers may deform and crack the housing.

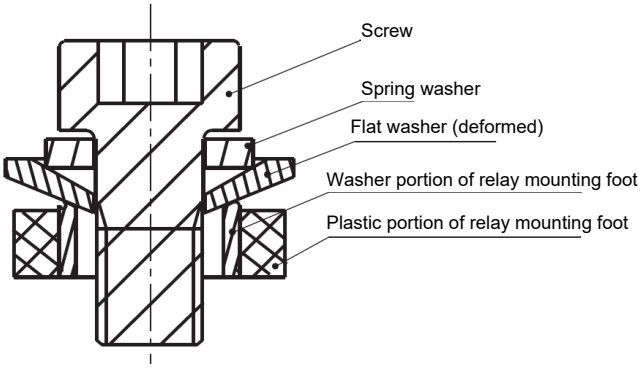

12. Keep grease and other foreign matter off the terminal tabs. Use connecting conductors with a cross-sectional area of at least 250 mm²; otherwise, abnormal heating may occur at the terminals.

13. Observe the recommended copper busbar thickness and bolt tightening torque in the table below. Values outside these recommendations may cause stripped threads or insecure mounting. Insufficient torque results in inadequate contact pressure between the busbar and terminal, increasing interface resistance and causing severe localized heating, abnormally high temperatures or even contactor burnout. At rated current, the busbar cross-sectional area shall be at least the recommended value below. Installing both busbars on the same side is not recommended, to avoid high-voltage short circuits or arcing.

Load terminal type	Recommended busbar thickness	Recommended busbar cross-section	Recommended busbar hole diameter	Tightening torque
Internal thread M8	5 mm	≥ 250 mm²	Ø8.1 mm-Ø8.5 mm	8 N·m-10 N·m

14. Dropping the contactor may cause structural failure or deterioration of its internal magnetic components, affecting product function and performance. As a general rule, a contactor that has been dropped shall not be used again.

15. Keep silicone-containing substances (such as silicone rubber, silicone oil, silicone-based coatings and silicone fillers) away from the contactor. They may release silicon-containing volatile gases that deposit on the contacts and cause poor electrical contact.

Note: Products, specifications and parameters may change as a result of product improvements. UNITONE reserves the right to revise this product manual. Customers should confirm its contents before placing their first order and request updated product information where necessary.

© UNITONE